accucold

FFAR2L7MED

19.75" x 19.75" x 21" (H x W x D)

Commercially approved compact all-refrigerator with temperature alarm and external display, internal fan, hospital grade cord and front lock

Highlights:

Commercially approved for use in foodservice establishments

Factory-installed lock provides security you can count on

Fully featured for medical applications, with hospital grade cord included

Product Features:

Commercially approved	ETL-S Approved to ANSI-NSF Standard 7 and CalCode Compliant
Fully finished white cabinet	Allows the unit to be used freestanding
Cube shaped	Square footprint for placement on top of counters
Factory installed lock	Keep contents secure with a key lock on the door
Alarm with temperature display	Temperature alarm warns of interior fluctuations while providing an external temperature readout on the door
Internal fan	Provides even circulation throughout the interior
Hospital grade cord and plug	Green dot plug for added safety
Automatic defrost	Simplify appliance care by letting the refrigerator defrost itself
Adjustable thermostat	Manage the interior temperature with ease and accuracy

SUMMIT APPLIANCE DIVISION, FELIX STORCH, INC. | ISO 9001:2015 Certified
770 Garrison Avenue Bronx, NY 10474 USA **TEL** 718-893-3900 **FAX** 844-478-8799 info@summitappliance.com **www.summitappliance.com**

accucold

FFAR2L7MED Specifications:

Overview	
Height of Cabinet	20.75" (53 cm)
Height to Hinge Cap	19.75" (50 cm)
Width	19.75" (50 cm)
Depth	21.0" (53 cm)
Depth with Handle	21.0" (53 cm)
Depth with door at 90°	39.5" (100 cm)
Capacity	1.8 cu.ft. (51 L)
Defrost Type	Automatic
Door	White
Cabinet	White
US Electrical Safety	UL
Canadian Electrical Safety	ULC
Sanitation	ETL-S
Other Energy Info	115V / 60Hz
Amps	1.2
Voltage/Frequency	115 V AC/60 Hz
Parts & Labor Warranty	1 Year
Compressor Warranty	5 Years
UPC	761101021751
Refrigerator Features	
Door Swing	RHD
Reversible	Factory Reversible
Shelf Type	Wire
Shelf Qty	1
Full Door Shelf Qty	1
Half Door Shelf Qty	1
Adjustable Shelves	Yes
Thermostat Type	Dial
Fan Type	Interior
Refrigerant Type	R134a
Refrigerant Amount	1.84oz.
High Side PSI	250.0
Low Side PSI	88.0
Level Legs Qty	2
Dimensions	
Interior Height	15.75" (40 cm)
Interior Width	16.75" (43 cm)
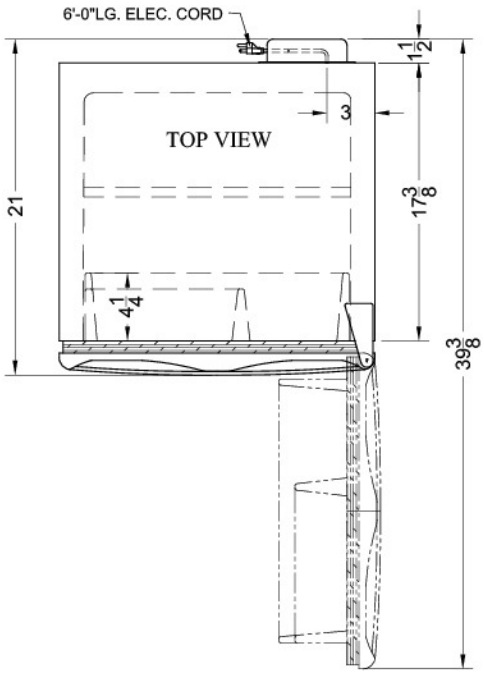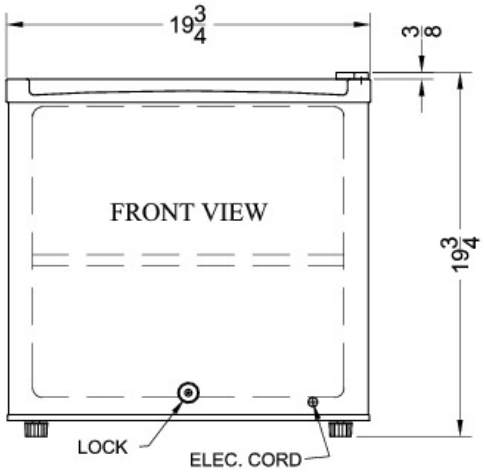
Interior Depth	15.5" (39 cm)
Compressor Step Height	7.5" (19 cm)
Compressor Step Width	16.75" (43 cm)
Compressor Step Depth	6.5" (17 cm)