accucold

FF511LBIVACADA

32.5" x 19.25" x 22.25" (H x W x D)

Built-in ADA undercounter medical all-refrigerator for temperature stable medical storage, with interior basket drawers, internal fan, lock, and more

Highlights:

Medical grade design conforms with CDC guidelines for vaccine storage

Interior drawers ensure stored items are not exposed to room temperature when the door is open

Automatic defrost with an internal fan for stabilized cooling designed to stay within 2ºC of set temperature

Product Features:

Improved temperature stability	Interior is designed to operate within 2ºC of set temperature performance
ADA compliant	32" high to fit under lower ADA compliant counters
Interior basket drawers	Three slide-out plastic drawers offer convenient storage solutions while protecting stored items when the door is open
Digital thermostat	Electronic controls ensure easy and intuitive temperature management
High/low temperature alarm	Audible alarm sounds if the interior temperature rises or falls out of set range
NIST calibrated temperature display	Alarm includes NIST calibrated display of the current interior and high/low temperature
Self-closing door	Door closes automatically when opened at angles less than 90º
Access port with contact	Pre-installed probe with contact allows users to install their own monitoring equipment; customers can specify placement of the access port upon order
Hospital grade cord with 'green dot' plug	Secure three-pronged 'green dot' cord for added unit safety in high traffic settings

accucold

FF511LBIVACADA Specifications:
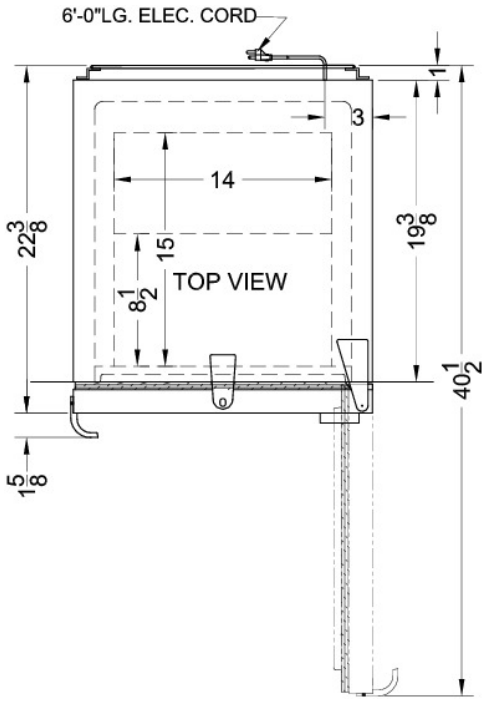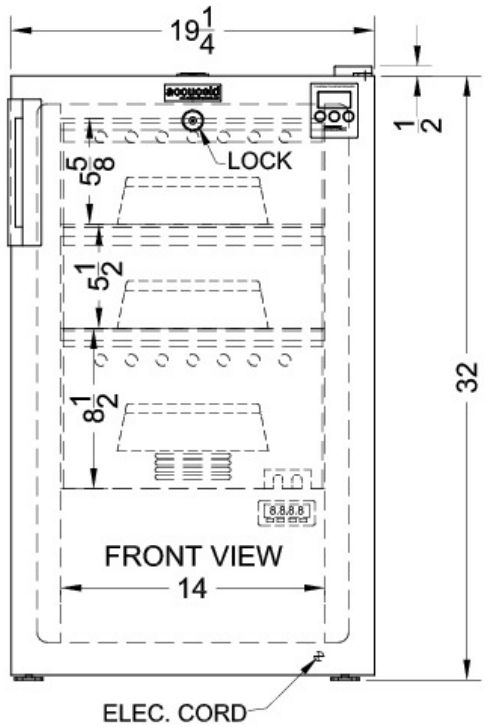
Overview	
Height of Cabinet	32.0" (81 cm)
Height to Hinge Cap	32.5" (83 cm)
Width	19.25" (49 cm)
Depth	22.25" (57 cm)
Depth with door at 90°	39.5" (100 cm)
Capacity	2.5 cu.ft. (71 L)
Defrost Type	Automatic
Door	White
Cabinet	White
US Electrical Safety	ETL
Canadian Electrical Safety	ETL-C
Amps	1.4
Voltage/Frequency	115 V AC/60 Hz
Weight	75.0 lbs. (34 kg)
Parts & Labor Warranty	2 Years
Compressor Warranty	5 Years
UPC	761101035512
Refrigerator Features	
Door Swing	RHD
Reversible	Factory Reversible
Thermostat Type	Digital
Fan Type	Interior and Exterior
Refrigerant Type	R134a
Refrigerant Amount	1.75oz.
High Side PSI	205.0
Low Side PSI	103.0
Level Legs Qty	2
Interior Drawers	Yes
Interior Drawers Qty	3
Temperature Range	2º to 8ºC